VOICE ACOUSTIC
professional german loudspeaker systems

MANUAL
SCORE-8

Multifunctional loudspeaker



QUALITY MADE IN GERMANY

Thank you very much,
for purchasing a Voice-Acoustic product.
Since 2006 we have been developing our
products in the firm belief that details matter.
May we wish you a lot of pleasure with this product.

Herzlichen Dank,
dass Sie ein Voice-Acoustic Produkt gekauft haben.
Seit dem Jahr 2006 entwickeln wir unsere Produkte
in der Überzeugung, dass es auf die Details ankommt.
Wir wünschen Ihnen viel Freude mit diesem Produkt.

Muchas gracias
por haber comprado un producto de Voice-Acoustic.
Desdel año 2006 estamos desarrollando nuestros productos
estando convencidos, que son los detalles que cuentan.
Le(s) deseamos mucha alegría usando este producto.

Merci beaucoup
d´avoir acheté un produit Voice-Acoustic.
Depuis 2006, nous développons des produits
avec la ferme conviction que les détails comptent.
Nous vous souhaitons beaucoup de plaisir à utiliser ce produit.

VOICE ACOUSTIC
professional german loudspeaker systems

Contents

Introduction

General Safety Instructions 4
Care 4
Transport and storage 4
Warranty 4
Components 5
Technical data 6
Connections 6
Setup 7
Connecting cables 7
Operation 7

Working with Score-8

Mounting the L-bracket 8
Adjust the tilt 8
Flight operation with L-bracket on truss 8
Installations with truss clamp adapter 9
Mounting the tilting and swivelling wall bracket 10
Mounting the U-bracket 10
Mounting the C-bracket 10
Monitoring with Score-8 11
Easyfly mechanics 11
Installations with Easyfly mechanics 11
Adjusting the inclination with the Easyfly mechanic 12
Overview Accessories 13

Manufacturer's declaration

Imprint 15

Introduction

General Safety Instructions:
Loudspeakers produce a static magnetic field even if they are not connected or are not in use. Therefore make sure when erecting and transporting loudspeakers that they are nowhere near equipment and objects which may be impaired or damaged by an external magnetic field. Persons with cardiac pacemakers must maintain a safe distance.

The minimum recommended safety clearance is 1 m.

Never stand in the immediate vicinity of loudspeakers driven at a high level. Professional loudspeaker systems are capable of causing a sound pressure level detrimental to human health. Seemingly non-critical sound levels (from approx. 90 dB SPL) can cause hearing damage if people are exposed to it over a long period.

All connected cables must be laid in such a way that they cannot be crushed by objects and that nobody can step on them! Replace damaged cables immediately and do not use them!

Use only accessory parts specified by Voice-Acoustic or original accessory parts from Voice-Acoustic. Check all cabinets and accessories regularly for wear and replace them if necessary.

Do not set up the loudspeakers in places where they are permanently exposed to moisture, dust, dirt or direct sunlight.

Care
Wipe the surface of loudspeakers only with a damp cloth and pure water. In case of heavy pollution, repeat the above procedure several times if necessary. Do not use any chemical additives or aggressive detergents, as these may harm and damage the surfaces.

Transport and storage
When transporting and storing the unit, it is important to ensure that the surface and front grill of the loudspeaker are not damaged. Moisture can penetrate through exposed wood surfaces and cause the wood to swell. A bent or broken front grill will no longer adequately protect the sensitive speaker membranes. In addition, appreciable dust deposits may considerably impair the functionality of a loudspeaker membrane. For this reason, the loudspeakers should be transported and stored in a safe, careful, dry and largely dust-free manner.

The following accessory parts for transport and storage are available from Voice-Acoustic:

- Transport and rain cover for Score-8 (Art.-Nr. 508001000)

Note: *The original packaging is unsuitable as permanent storage and transport packaging!*

Warranty
The warranty period is 24 months from date of delivery.

On our choice we will eliminate any lack of conformity with repair or with replacement of the faulty goods. The place of performance for warranty services is Voice-Acoustic headquarters in Dörverden. In case of remedy of defects, the buyer shall bear all costs resulting from transportation of the goods to Voice-Acoustic headquarters in Dörverden.

The ordering party is not entitled to remedy the defect by itself or to organise a replacement and to charge such activities to Voice-Acoustic. In case of self remedy by the ordering party the warranty given by Voice-Acoustic becomes void.

Warranty doesn't apply to parts of wear and tear, such as threaded points, Camlock connectors and the SpeakON® connectors.

Introduction

Components

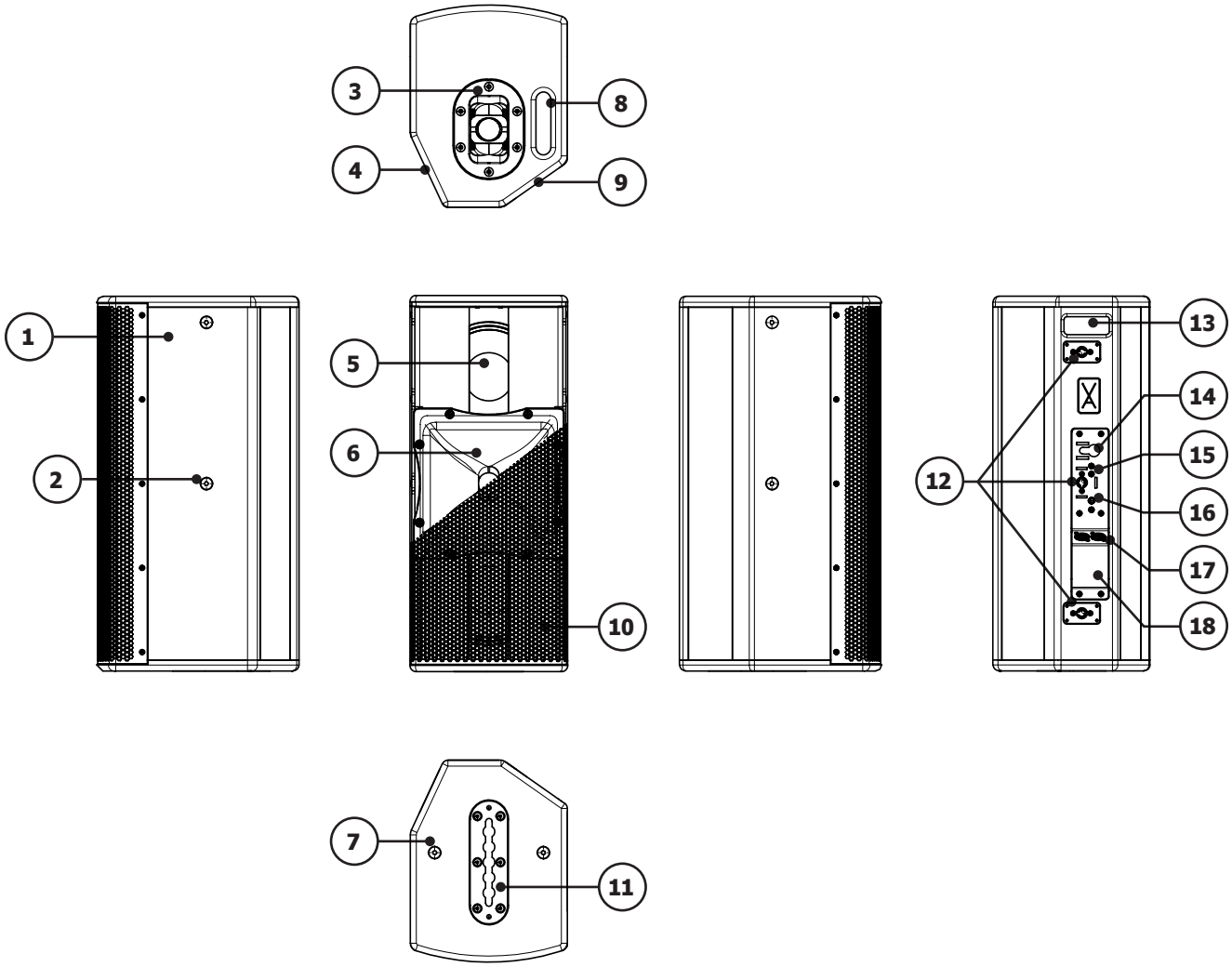

1. 15 and 12 mm multiplex cabinet, Surface with moisture resistant polyurea coating
2. 2 x M10 mounting point for U-bracket
3. Tilting pole socket +/- 18°
4. Monitor slant 25°
5. 8“ Neodym woofer
6. 1,4“ Neodym compression driver with horn 90° x 40° or 60° x 40°
7. 8 x M10 mounting points with internal steel brackets
8. Recessed grip on the underside
9. Monitor slant 55°
10. Front grille 1 mm with 5 mm acoustic foam
11. Easyfly flying track for vertical suspension
12. Camlock for tool-free bracket mounting
13. Rear recessed grip top
14. Safety point for safety rope with Single-Stud
15. M6 threaded points for mounting a wall or ceiling bracket
16. M8 threaded points for mounting accessories, e.g. truss clamp
17. Connector panel with two SpeakON® connectors
18. Type plate with serial number

Introduction

Technical data

Components	2 x 8“ Neodym woofer with 2,5“ voice coil 1 x 1,4“ Neodym compression driver with 2,4“ voice coil
Frequency response	65 Hz - 19 kHz (- 10 dB) 78 Hz - 17,3 kHz (+/- 3 dB)
Coverage range (h x v)	90° x 40° or 60° x 40°
Monitor angles	55° and 25°, 90° for Nearfill
Powerhandling	500 W AES / 1.000 W program / 2.000 W peak at 4 Ω
Sound pressure	130 dB SPL AES / 133 dB SPL program / 136 dB SPL peak
Dimensions / Weight	625 (h) x 262 (w) x 337 (d) mm / 19,6 kg
Finish	Polyurea coating in RAL 9005, Special colors in Warnex textured paint

Connections

The speaker has two loop-through Neutrik NL4 SpeakON® IN/OUT connectors. They use the 1+/1- connection pins. Additional loudspeakers can be looped through via the second connector.

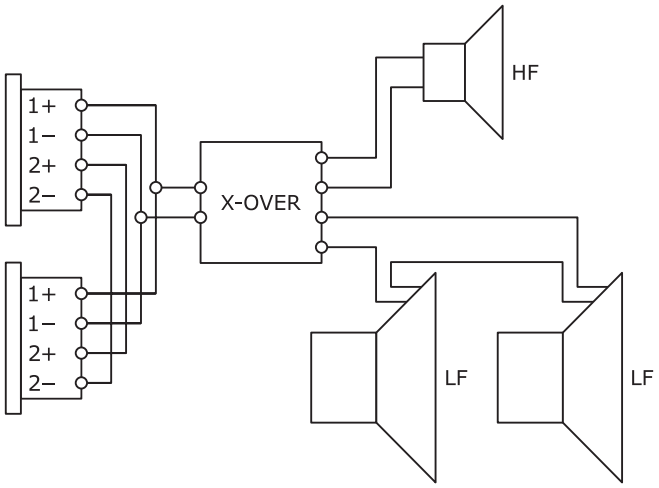

Working with Score-8

Setup

The Score-8 loudspeaker is designed for vertical and horizontal operation. A variety of accessories is available from Voice-Acoustic to securely attach the loudspeaker safely on tripods, distance rods or hanging it from on trusses, ceilings and walls. Ensure that the loudspeakers are securely attached to prevent personal injury and damage of property.

Connecting cables

When connecting the cables to the loudspeaker, ensure that the polarity (+/-) and pin assignment (1/2) is correct. Incorrect connection results in a significant change in the loudspeaker sound characteristics and may damage the compression driver.

The two connection sockets on the back of the loudspeaker can be used to link multiple loudspeakers on a single amplifier. Note that parallel connection reduces the total impedance (Ω) seen by the amplifier. The total impedance of loudspeakers connected in parallel must not drop below the minimum operating impedance of the amplifier.

Voice-Acoustic recommends to use the available 4 x 4 mm² Speakon cables for mobile use.

We recommend wiring the basses with at least 4 mm² in installations. The cables of the tops in installations must be sufficiently dimensioned according to impedance, power and cable length.

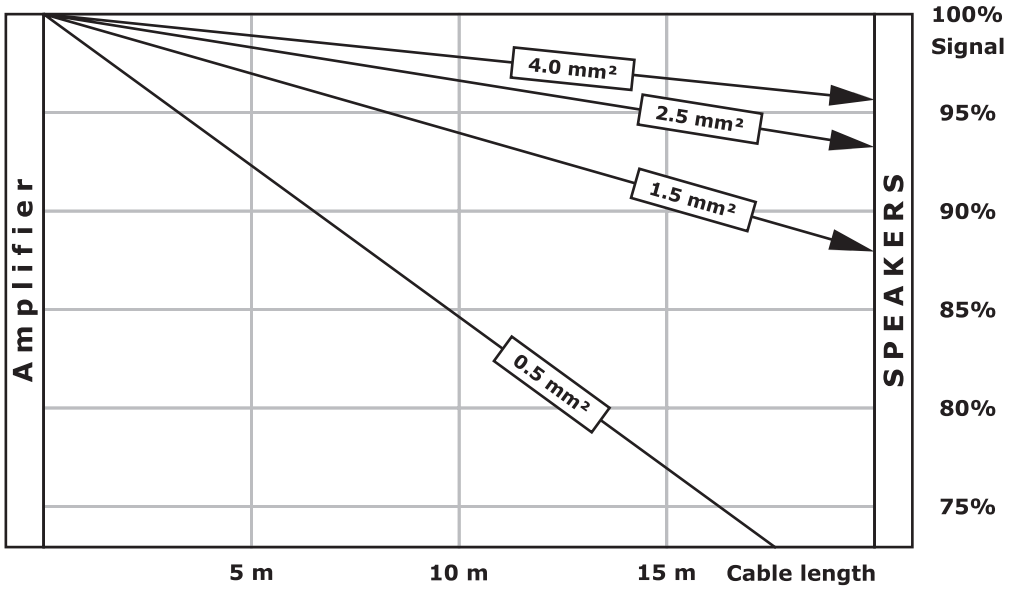

Simplified display without consideration of loudspeaker impedances

Operation

The Score-8 is exclusively intended for operation with Voice-Acoustic system electronics with internal DSP controller: the HDSP power amplifiers or powered by the free 800 W amplifier channels of the self-powered subwoofers.

When working with the Voice-Acoustic system electronics, make sure the appropriate preset has been selected before connecting the loudspeaker to the system power amplifier or self-powered subwoofer. Using the wrong preset can damage parts of the loudspeaker.

Note: *If the Score-8 is not operated on the intended Voice-Acoustic system electronics, the manufacturer's warranty for the loudspeaker expires!*

Working with Score-8

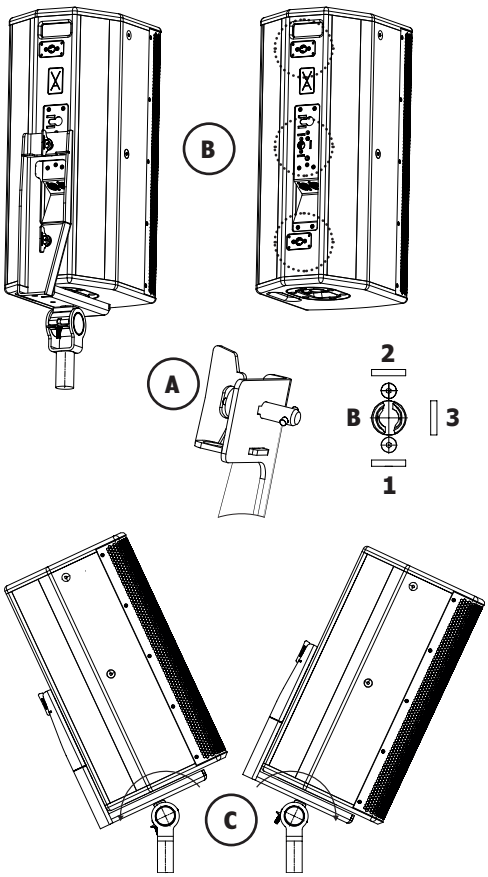

Mounting the L-bracket

1. To hold the L-bracket in a desired position, select one of the fixing points (1) to (2).
2. Insert both camlock connectors (A) of the L-bracket into the holding cam (B) and turn it around until it engages.

Note: *The Camlock connector must be turned and locked correctly to prevent the loudspeaker from falling off!*

Fixing points:
(1) L-bracket bottom, Score-8 in tripod mode
(2) L-bracket top, Score-8 in flight operations
(3) L-bracket sideways, not possible with one Camlock connection!

Adjust the tilt

Mount the truss clamp to the L-bracket in such a way that the wing nut (C) does not hinder tilting.

1. Secure the loudspeaker against tipping by hand.
2. Slightly unscrew the wing nut (C) on the clamp.
3. Adjust the tilt.
4. Tighten the wing nut (C) again to fix it.

Note: *The wing nut of the clamp must always be tightened, otherwise there is a risk that it will come loose due to vibrations and the loudspeaker could tilt uncontrollably!*

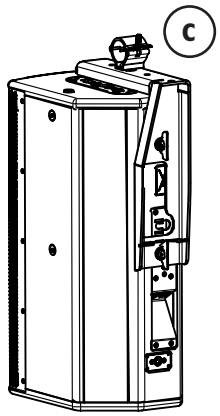

Flight operation with L-bracket on truss

Without truss clamp adapter, the L-bracket with its clamp can be used on all common truss with 48 - 51 mm belt tubes. The three fixing points are also used here.

Fixing points:
(1) Connection panel at the top (cables are routed upwards)
(2) Connection panel at the bottom (cables are routed downwards)

Note: *If you use the fixing point (3) for flight operation, you must first insert the single-stud fitting into the intended securing point. Since then the L-bracket sits in front of it!*

1. Hang the loudspeaker and L-bracket with clamp into the truss.
2. Adjusting the tilt.
3. Tighten the wing nut (C) again to fix it.

Note: *If speakers are suspended with detachable connections, they require a second, independent, non-combustible connection (secondary fuse), usually an appropriately dimensioned steel safety rope. Please observe the currently applicable standards and regulations.*

Working with Score-8

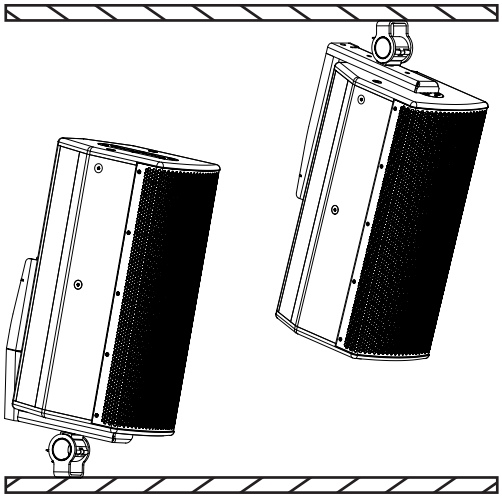

Installations with truss clamp adapter
Attach the truss clamp adapter to the wall, ceiling or floor using suitable fixing materials.

Installation with truss clamp at the rear and adapter horizontally on the wall, or upside down on the ceiling.

1. Use an M8 x 15 mm threaded screw and washer to mount the truss clamp to the M8 threaded point on the rear of the loudspeaker.
2. Hang the loudspeaker into the adapter.
3. Adjust the tilt.
4. Tighten the wing nut again to fix it.

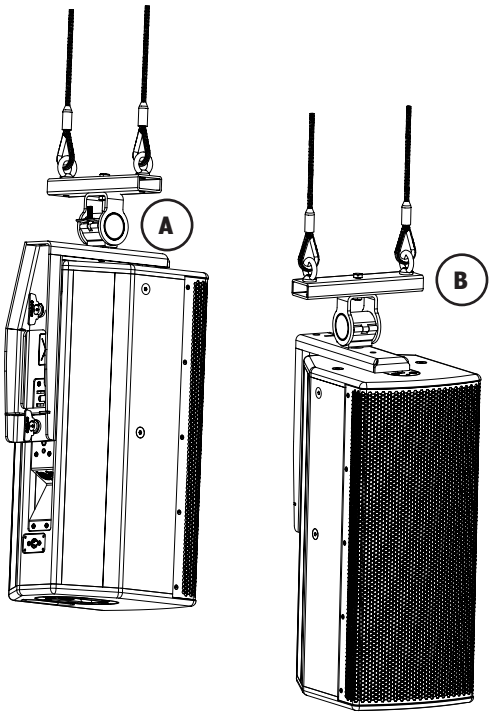

Installation with L-bracket with truss clamp and adapter on the ceiling or standing.

1. Hang loudspeakers with L-bracket into the adapter.
2. Adjust the tilt.
3. Tighten the wing nut again to fix it.

Installation using universal suspension device for flight mechanisms, L-bracket with truss clamp and adapter on high ceilings.

1. Mount the truss clamp at point (A) of the L-bracket.
2. Attach the truss clamp adapter to the universal suspension device (B) using suitable fastening material.
3. Hang loudspeakers with L-bracket into the adapter.
4. Adjust the tilt.
5. Tighten the wing nut again to fix it.

Working with Score-8

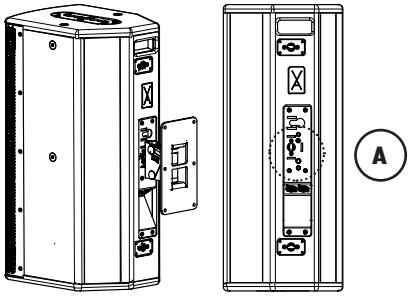

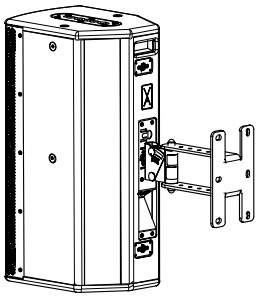

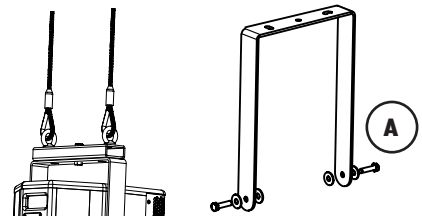

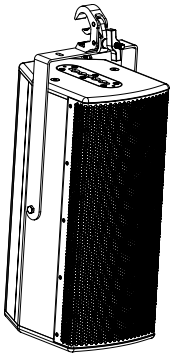

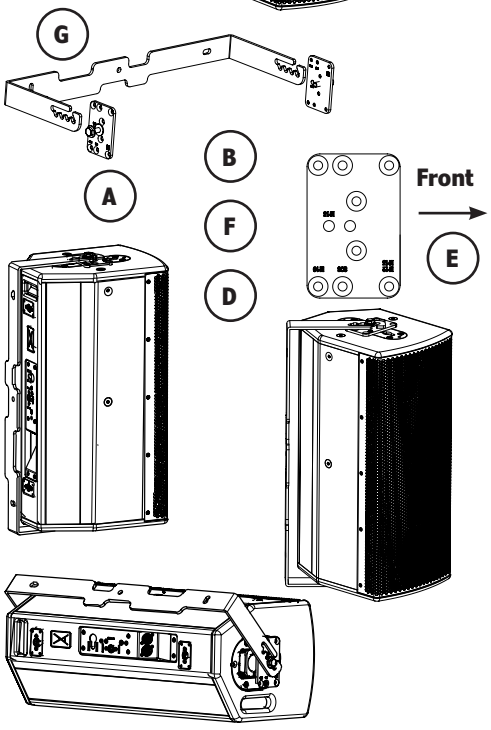

Mounting the tilting and swivelling wall bracket

1. When mounting the bracket to the wall, follow the manufacturer's operating instructions.
2. Remove the swivel bracket on the wall bracket.
3. Use two M6 x 15 mm threaded screws and washers to fix the swivel bracket to the two M6 threaded points (A) on the rear of the loudspeaker.
4. Hang the swivel bracket (with mounted speaker) into the bracket attached to the wall.
5. Screw parts together using the lower carriage bolt, washer and lock nut.
6. Adjust and fix the tilt.

Mounting the U-bracket

1. Remove the M10 countersunk screws (A) on both sides of the Score-8.
2. Use the supplied M10 hexagon head screws (B) including plastic washers to mount the U-bracket.
3. To protect the coatings, place the plastic discs between the hexagon head screw, U-bracket and Score-8.

Mounting the C-bracket

The bracket consists of two different brackets and connected by two M8 screws.

1. Mount the C-bracket (B) with two M6, one M8 x 15 mm threaded screw and washers firmly to the three threaded points (A) on the rear of the speaker.
2. Observe the recess (C) for the cable feed on the bracket.
3. Mount the second bracket (D) horizontally or vertically to the wall using the appropriate fixing material.
4. Connect the brackets with the two M8 screws (E).
5. Adjust and fix the tilt or direction.

Note: *Since the cabinet wall lies benneath the rear threaded points, the threaded screws must not exceed 15 mm in length!*

Working with Score-8

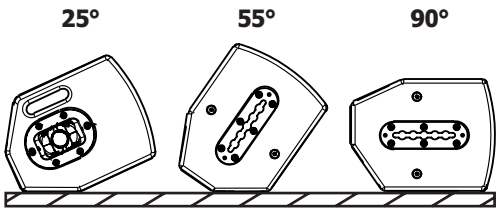

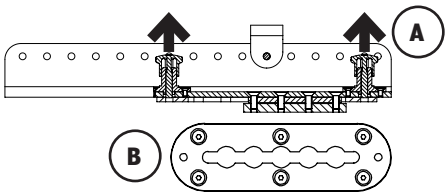

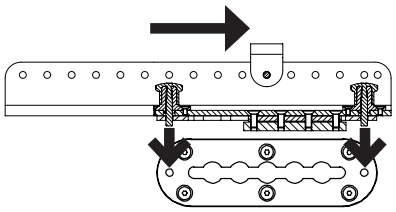

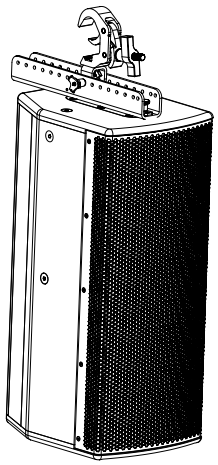

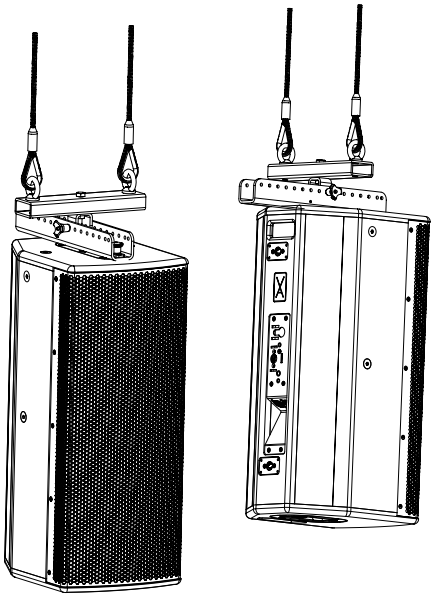

Monitoring with Score-8

For monitor operation, two housing slopes, 25° and 55°, are available for Score-8. At 90°, due to the side wall running to the baffle and flat design, the Score-8 is ideal as an inconspicuous nearfill on the front edge of the stage or installed in staircases.

Easyfly mechanics

Tool-less flight mechanism for clicking in and exact alignment of the loudspeaker in the horizontal and vertical axis.

1. Pull the two locking bolts (A) upwards and let them engage by turning them slightly.
2. Insert the Easyfly mechanics into the flying track (B).
3. Slide the mechanics backwards as far as it will go.
4. Let the two locking bolts snap into the intended holes on the flying track.

Note: *Notice that the two locking pins (A) are engaged to prevent the Easy-fly-Mechanics from slipping out.*

Installations with Easyfly mechanics

Installation with self-lock clamp (C) on trusses.

1. Mount the self-lock clamp to the Easyfly mechanics using an M10 threaded screw and lock nut.
2. Hang the clamp and holder into the mechanics using ball lock bolts.
3. Hang the loudspeaker into the truss.
4. Adjust the inclination by fixing the holder on the top hole rail with the ball locking pin.

Installation with universal suspension arrangement for flight mechanics (D) on high ceilings

1. Mount the universal suspension arrangement for flight mechanics with an M10 threaded screw and lock nut to the mounting of the Easyfly mechanics.
2. Hang the suspension device and holder into the mechanics using ball locking bolts.
3. Hang the loudspeaker into the installed chains.
4. Adjust the inclination by fixing the holder on the top hole rail with the ball locking pin.

Note: *The inclination depends on the hole in which you fix the Easyfly mount on the hole rail!*

Working with Score-8

Adjusting the inclination with the Easyfly mechanic

The Easyfly mechanic have 16 locking holes which can be used to determine the inclination.

Vertical operation

1. 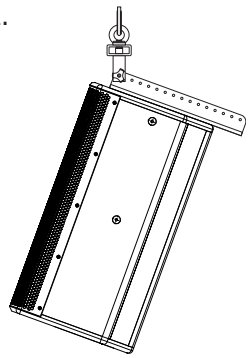 **20.0°**	2. 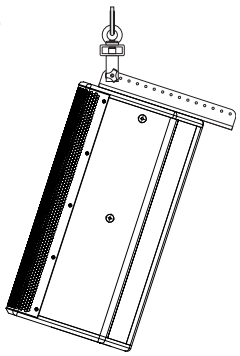 **18.0°**	3. 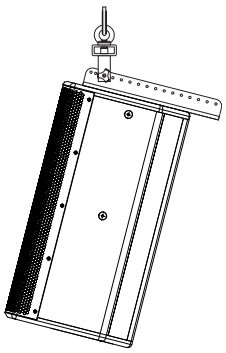 **14.3°**	4. 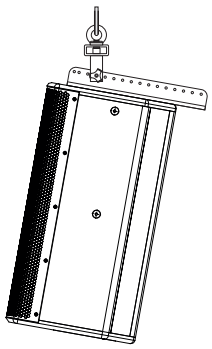 **10.1°**
5. 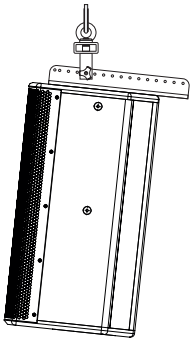 **6.0°**	6. 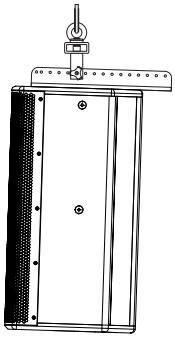 **1.8°**	7. 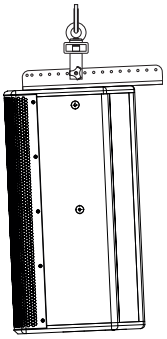 **-2.5°**	8. 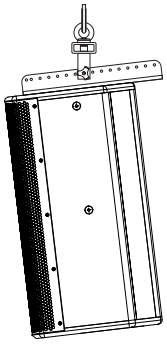 **-6.7°**
9. 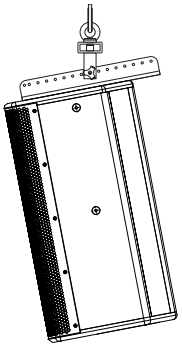 **-10.8°**	10. 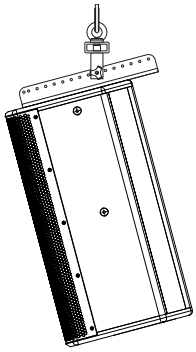 **-14.9°**	11. 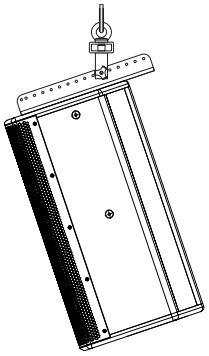 **-18.6°**	12. 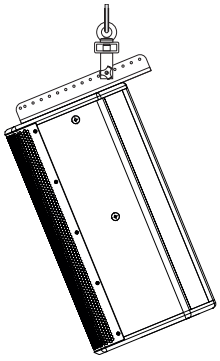 **-22.3°**
13. 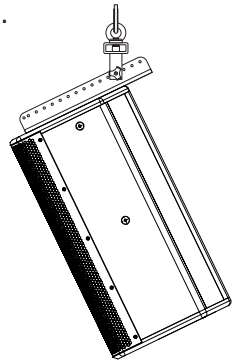 **-25.8°**	14. 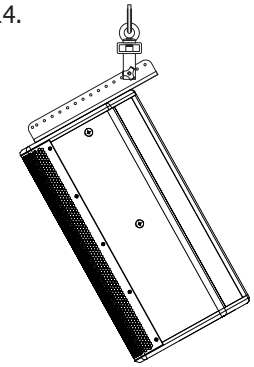 **-29.1°**	15. 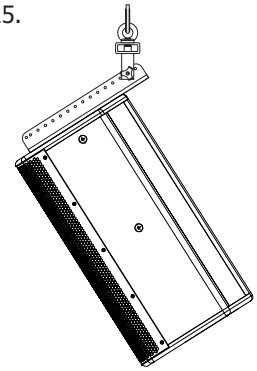 **-32.3°**	16. 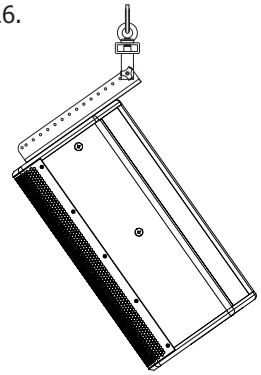 **-35.2°**

Working with Score-8

Overview Accessories



Transport and rain cover for Score-8 (Art.-Nr. 508001000)



L-bracket Score-8 (Art.-Nr. 408001001)
L-bracket Score-8, white (Art.-Nr. 408001002)



Truss clamp with 50 mm width, black, Global Truss, incl. M10 screw (Art.-Nr. 999982301)
Truss clamp with 50 mm width, silver, Global Truss, incl. M10 screw (Art.-Nr. 999982300)



Truss clamp adapter for Score-8 (Art.-Nr. 408001101)
Truss clamp adapter for Score-8, white (Art.-Nr. 408001102)



Tripod transducer with M10 x 12 mm bolt (Art.-Nr. 999924521)
Tripod transducer with M10 x 12 mm bold, withe (Art.-Nr. 999224521)



C-bracket for Score-8 (Art.-Nr. 408003001)
C-bracket for Score-8, withe (Art.-Nr. 408003002)



U-bracket for Score-8 (Art.-Nr. 408002001)
U-bracket for Score-8, withe (Art.-Nr. 408002002)



Self lock clamp for pipe 48-51mm, 30mm wide, max. 250 kg (Art.-Nr. 999950731)



Easyfly mechanics (Art.-Nr. 409991001)



Carrying bag for up to two Easyfly mechanisms with accessories (Art.-Nr. 409992000)



Universal suspension arrangement for flight mechanics (Art.-Nr. 409992001)



Multifunctional rotating ceiling bracket (Art.-Nr. 409998001)



Wall console for flight hardware (Art.-Nr. 409994901)

Working with Score-8



Wall mount with extension (Art.-Nr. 409994031)
Wall mount with extension, white (Art.-Nr. 409994032)



Wall bracket, slewable and 30° tiltable (Art.-Nr. 999924481)
Wall bracket, slewable and 30° tiltable, white (Art.-Nr. 999224481)



Wall bracket, max. 50 kg, slewable and 22° tiltable (Art.-Nr. 999924120)



Wall holder with tilt and swivel orientation: 145° horizontal, 30° vertical (Art.-Nr. 999924173)



Wall- and truss holder, max. 50 kg, slewable (Art.-Nr. 999924150)



M10 x 40 mm eyebolt (Art.-Nr. 999917370)



Safety 6/1000 mm (Art.-Nr. 999963100)



Single stud fitting (Art.-Nr. 999957450)



1,4“ horn 60° x 40° (Art.-Nr. 999146040)



1,4“ horn 90° x 40° (Art.-Nr. 999149040)

Manufacturer‘s declaration

Imprint
© SRV Licht- & Tonanlagen, all rights reserved.

All specifications in this manual are based on information available at the time of publishing for the features and safety guidelines of the described products. Technical specifications, measurements, weights and properties are not guaranteed.

The manufacturer reserves the right to make technical modifications according to legal regulations stipulating the continual improvement of product features. For the safe operation of the unit, this manual and all other required information must be available to all users at the time of assembly and disassembly of the unit, and during operation. Assemble or operate the unit only after reading and understanding this manual, and keeping it at hand at all times at the site.

We are happy to receive your suggestions and proposals for the enhancement of this manual.

Please send us your ideas to the following address:

SRV Licht- & Tonanlagen - Voice-Acoustic Headquarters
Brocksfeld 3
D-27313 Dörverden

Tel.: + 49 (0) 4234 942 777
E-Mail: info@voice-acoustic.de

Version 2026-11 EN